EAN 4260474034604
March 4, 2020
Document version 1.0

CANADUINO Smarter Relays 4.2 DIY Kit

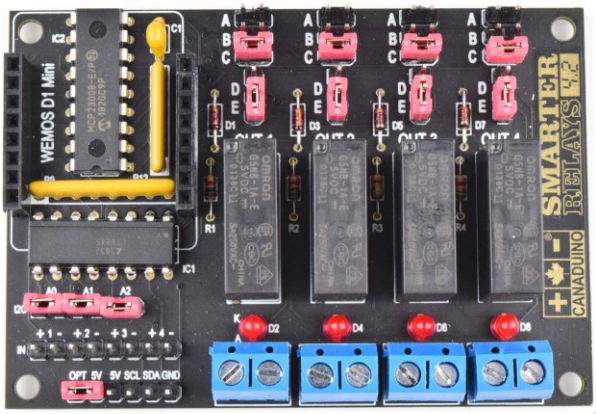

We developed a credit-card-sized 4-Channel relay module with the common parallel inputs, but a lot more than just this: We made all 4 channels independent to be used as sink or source inputs, we added I2C capability to cascade up to 8 of these modules (max. 32 relays) on a simple 2-wire connection, and we added a socket for a WEMOS D1 mini WiFi module, to control the whole thing using an internet browser or a smart phone app.

You can even mix the functions by for example controlling 3 relays over WLAN, and 1 relay using a straight wire to a button or a microcontroller output.

We decided to use a WEMOS D1 mini instead of any other WiFi module due to its “stackability”. For example, you can just stack an OLED display on top of it, to control the WiFi status or to see the current relay activities. Other than this, these modules are perfectly supported using the Arduino IDE for easy programming.

Smarter Relays 4.2 basic features:

- ✓ 4 sink inputs
- ✓ 4 source inputs
- ✓ 1 I2C input (8 addresses selectable)
- ✓ 4 relay outputs 5A max.
- ✓ WEMOS D1 mini (compatible included)

ASSEMBLING

Assembling this kit is very easy. We expect you to have some soldering experience with thru-hole electronic components, and of course basic knowledge in analog and digital electronics, to proceed with commissioning and troubleshooting after assembling. To support your work and to make some steps easier to understand, please see the pictures on UNIVERSAL-SOLDER.com

We recommend to first solder only 1 pin of every part (2 diagonal pins on DIP ICs), flip the board and make sure the parts are nicely lined up, before soldering all remaining pins.

1. Start with the lowest profile parts which are the 4 resistors and 4 diodes besides the relays.

2. Proceed with the 100nF capacitor, the LEDs, the 2 integrated circuits and the resistor networks, followed by all the headers, the screw terminals, and finally the relays.

3. Now you can prepare you D1 mini module and assemble 2 headers. Pick the one which better fits your application: The male pins only, or the long stackable ones.

Important notes:

- ⇨ Pin 1 of the ICs is always marked with a dot or notch and is the bottom-left pin when you can read the imprint on the package.
- ⇨ Pin 1 (or common) on resistor networks is always marked with a dot and/or is the most left pin when you can read the print on the package. This pin needs to line up with the marking (filled square) on the PCB.
- ⇨ LEDs always have a long (A) and a short (K) lead. We printed the polarity on the PCB.

COMMISSIONING

After performing visual testing for shorts or bad solder joints, install your WEMOS D1 mini module and connect it to the USB port of your computer.

Make sure you have WEMOS D1 mini support added to your Arduino IDE. Otherwise please install it now.

Download the demo sketch from our website, replace the WiFi credentials and IP address with your actual network values, and upload your sketch.

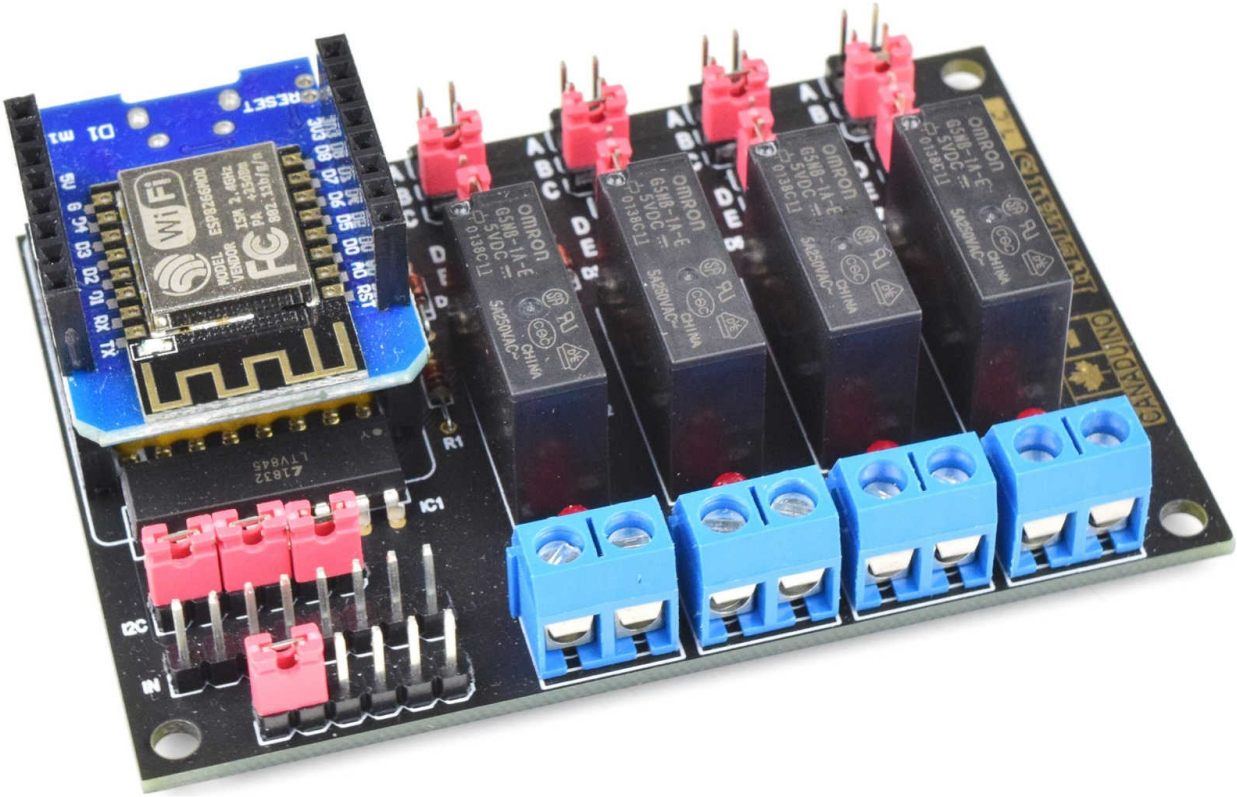

OPERATING

Information about jumper settings and operation modes are included in the schematic on the last page of this document. Please read carefully to avoid damage to the module.

Always add proper circuit protection and make sure the switching current can't exceed 5A (please see OMRON G5NB-1A-E data sheet for details) to avoid damage to the relays, serious accidents or even fire.

You need to possess necessary training and knowledge to operate with higher voltage. Please observe your local and national regulations.

PARTS LIST

Quantity	Value	Check
1	100nF 5mm	
4	1N4148 DO35	
4	LED 3mm red	
1	LTV845	
1	MCP23008	
1	D1 mini WiFi	
2	female header 1 x 8	
4	Terminal 2P 5mm	
4	OMRON 5V	
1	PCB	
1	male header 2 x 20	
1	male header 1 x 40	
9	jumper caps	
4	1k (0204)	
1	4 x 1k5 SIP8	
1	5 x 10K SIP6	

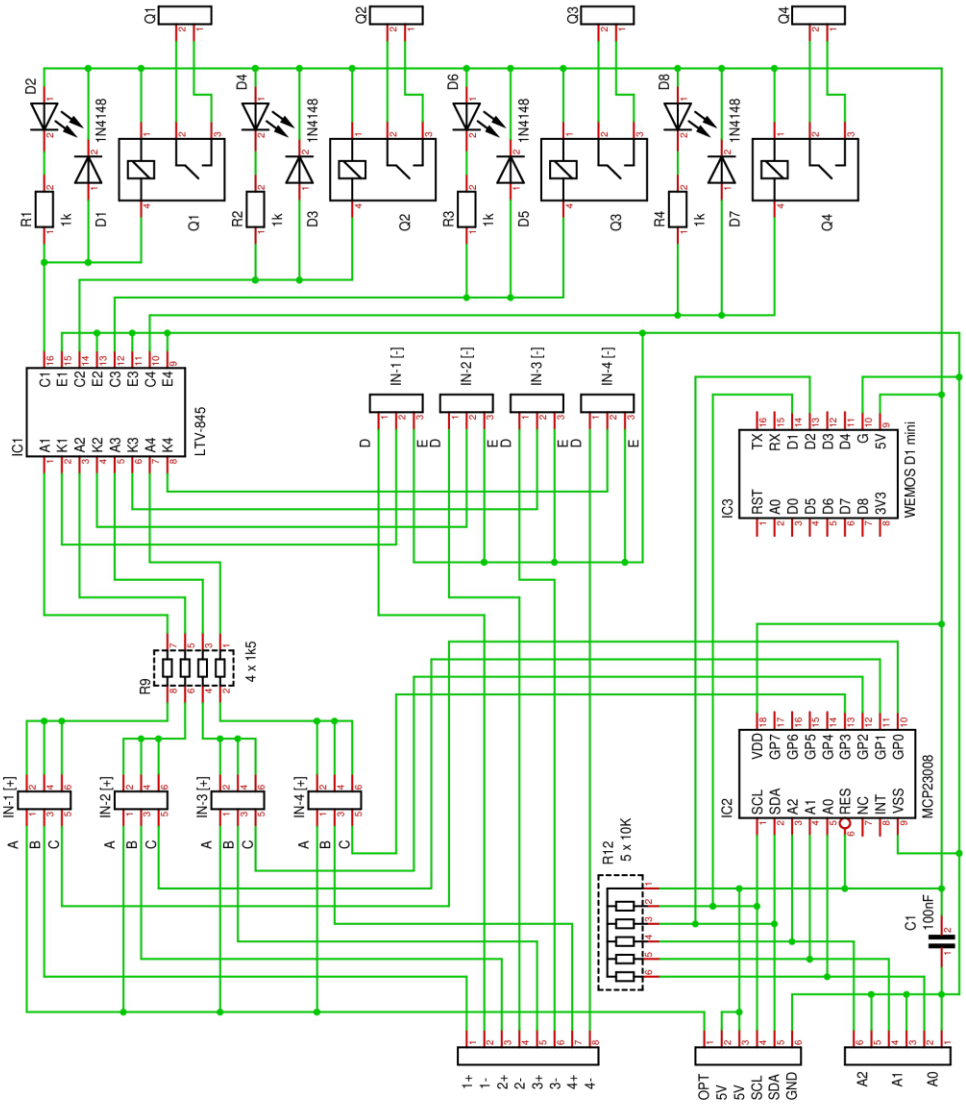

Operating modes explained:

A + D: Power for Optocouplers is supplied through the pin OPT, typically with a jumper between OPT and 5V. In this mode, relays are activated by applying LOW level to [-] input pin (sink).

A + E: not applicable

B + D: Optocoupler input is completely isolated from the rest of the circuit. The [+] input needs a HIGH level between 3V and 24VDC, and the [-] input a LOW level to activate the corresponding relay.

B + E: Like B + D, but [-] input is already connected to GND.

C + D: Relay can be activated by I2C or Wi-Fi if [-] input is LOW, for example through a MCU output (sink) or switch to GND. This is useful if besides the remote control function of a relay a local locking is required, for example by a safety device like an E-stop.

C + E: Like C + D, but [-] input always connected to GND, and relays controlled by Wi-Fi or I2C only.

Other important information:

1. The Optocouplers can be operated with input voltage of 3 to 24VDC between [+] and [-] input pins. If an input voltage other then 5V is used, the jumper between pins OPT and 5V must not be installed!

2. I2C address selection A1, A2, A3 (HEX)

A0	A1	A2	Address
L	L	L	0x20
H	L	L	0x21
L	H	L	0x22
H	H	L	0x23
L	L	H	0x24
H	L	H	0x25
L	H	H	0x26
H	H	H	0x27

3. Pull-Up resistors for I2C bus are already on board. Make sure your host controller does not have additional pull-up resistors installed (Arduino boards don't have).